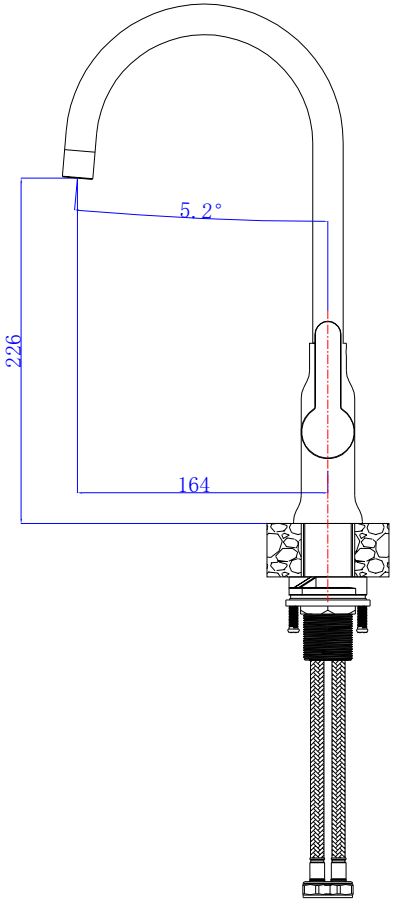
5.2°
226
164

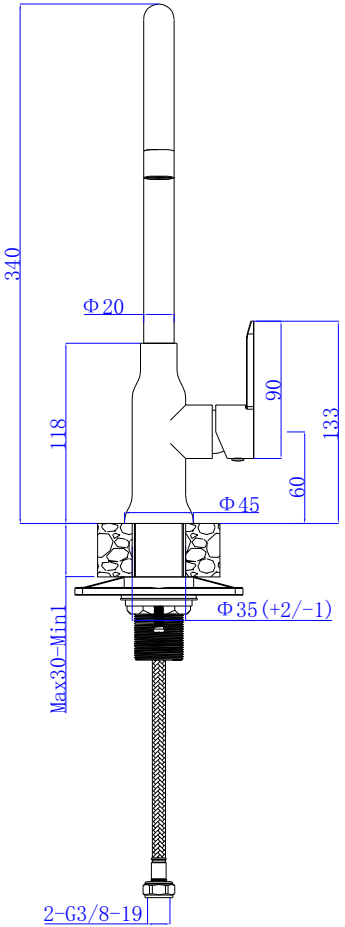
340
Φ20
118
90
133
60
Φ45
Φ35(+2/-1)
Max30-Min1
2-G3/8-19

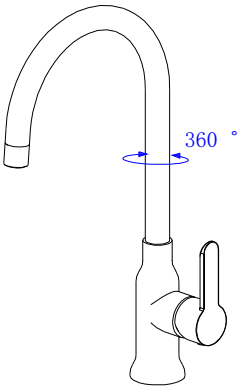
360 °