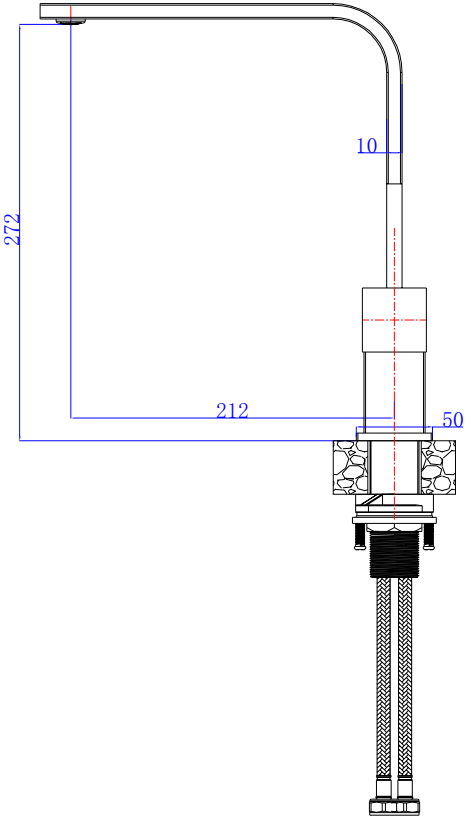
272
10
212
50

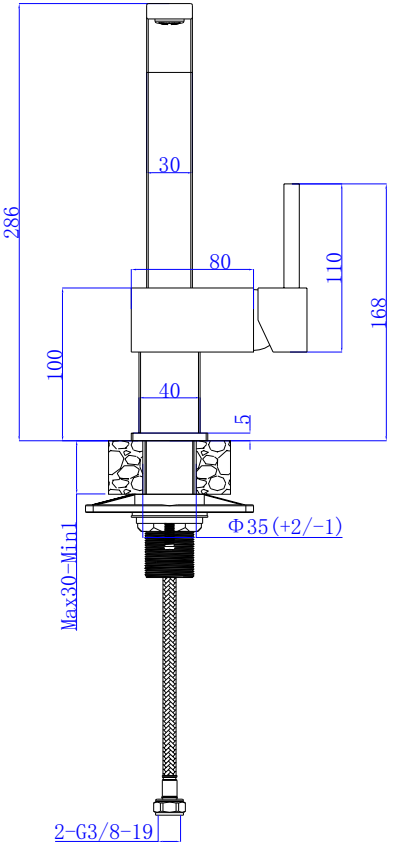
286
30
80
110
168
100
40
5
Φ35(+2/-1)
Max30-Min1
2-G3/8-19

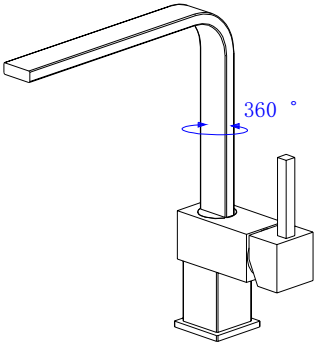
360 °