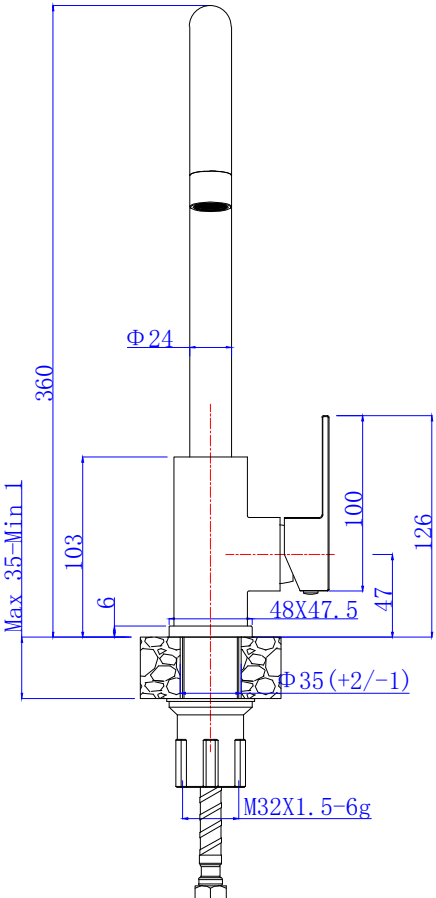
360
Φ24
Max 35-Min 1
103
6
100
126
47
48X47.5
Φ35(+2/-1)
M32X1.5-6g

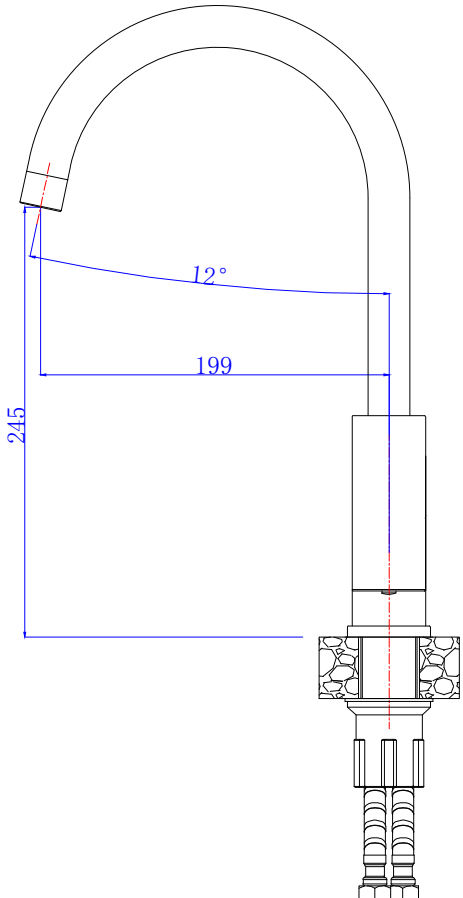
12°
199
245

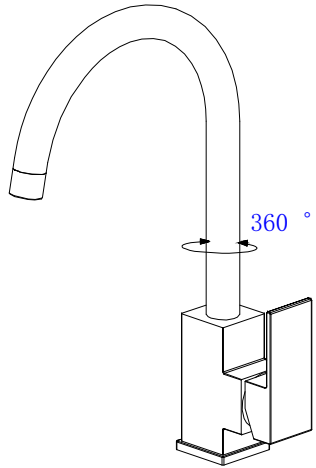
360 °